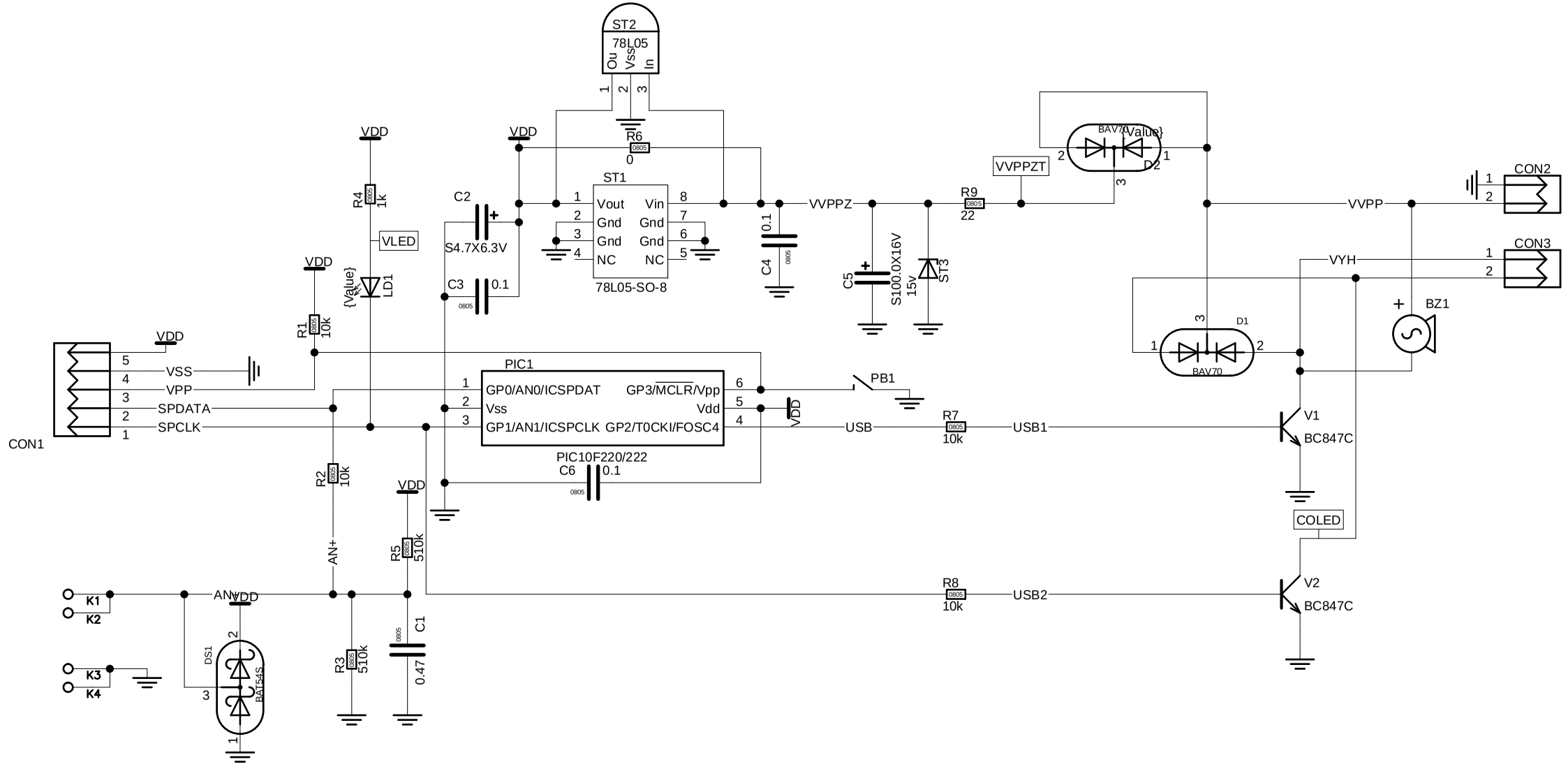
ST2
78L05
Ou
Vss
In
R6
0
ST1
Vout
Vin
Gnd
Gnd
Gnd
Gnd
NC
NC
78L05-SO-8
C2
S4.7X6.3V
C3
0.1
C4
0.1
C5
S100.0X16V
15v
ST3
VVPPZ
R9
22
VVPPZT
BAV70
D2
D1
BAV70
VVPP
CON2
CON3
VYH
BZ1
VDD
R4
1k
VLED
LD1
R1
10k
CON1
VSS
VPP
SPDATA
SPCLK
PIC1
GP0/AN0/ICSPDAT
GP3/MCLR/Vpp
Vss
Vdd
GP1/AN1/ICSPCLK
GP2/T0CKI/FOSC4
PIC10F220/222
C6
0.1
PB1
USB
R7
10k
USB1
V1
BC847C
COLED
R8
10k
USB2
V2
BC847C
R2
10k
R5
510k
AN+
K1
K2
K3
K4
AN-
DS1
BAT54S
R3
510k
C1
0.47